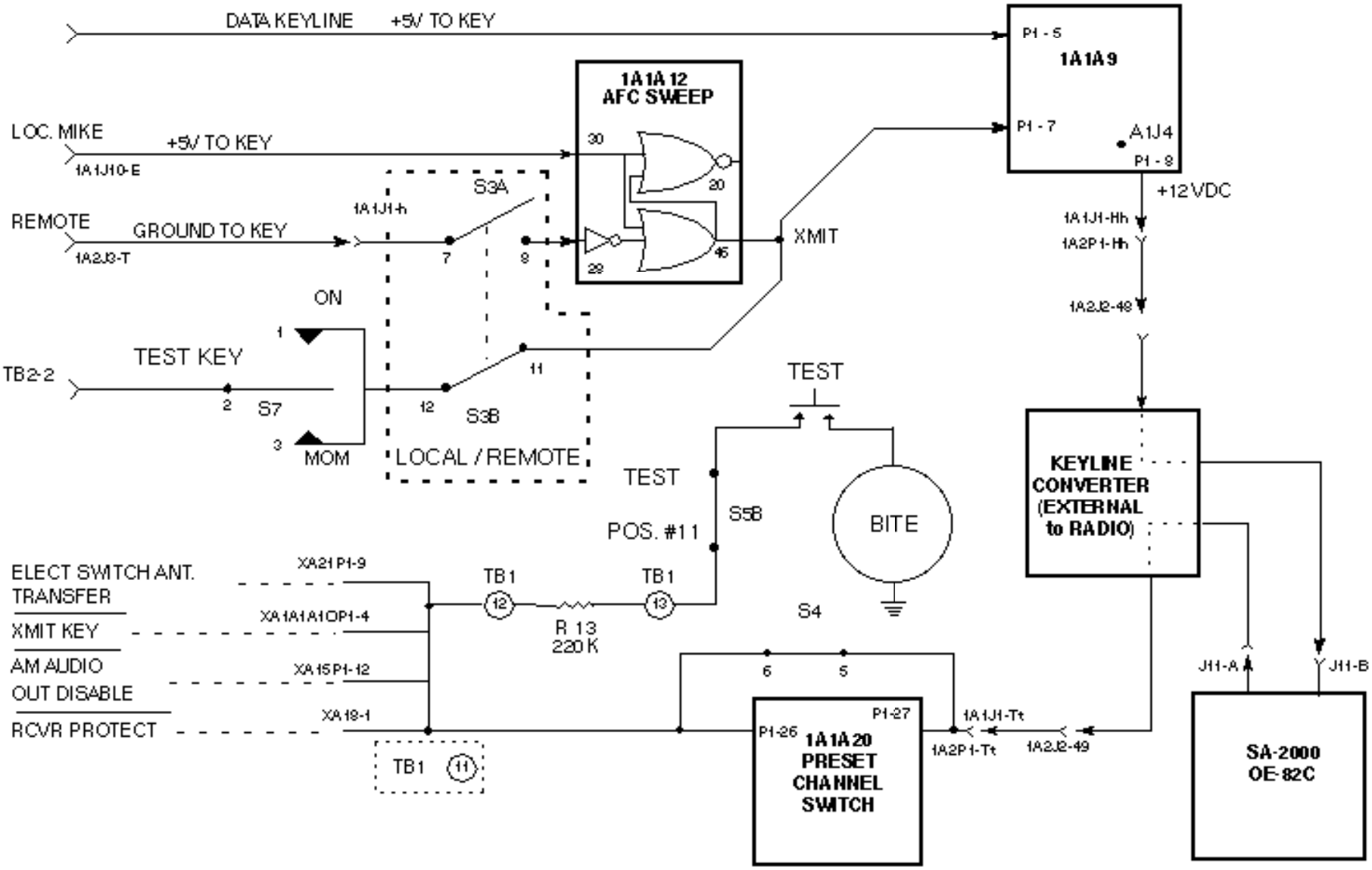SATCOM KEYLINE